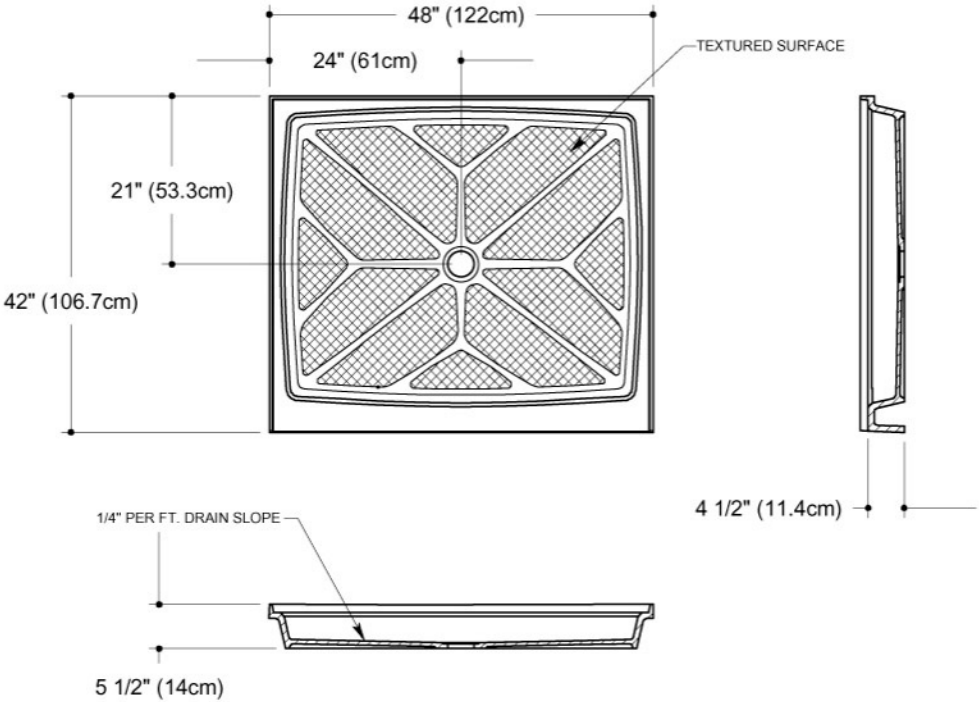
48" (122cm)
24" (61cm)
TEXTURED SURFACE
21" (53.3cm)
42" (106.7cm)
4 1/2" (11.4cm)
1/4" PER FT. DRAIN SLOPE
5 1/2" (14cm)

42x48”